SCREENSHOT GOLF

INSTALLATION GUIDE

Retractable Golf Impact Screen

Inside mount

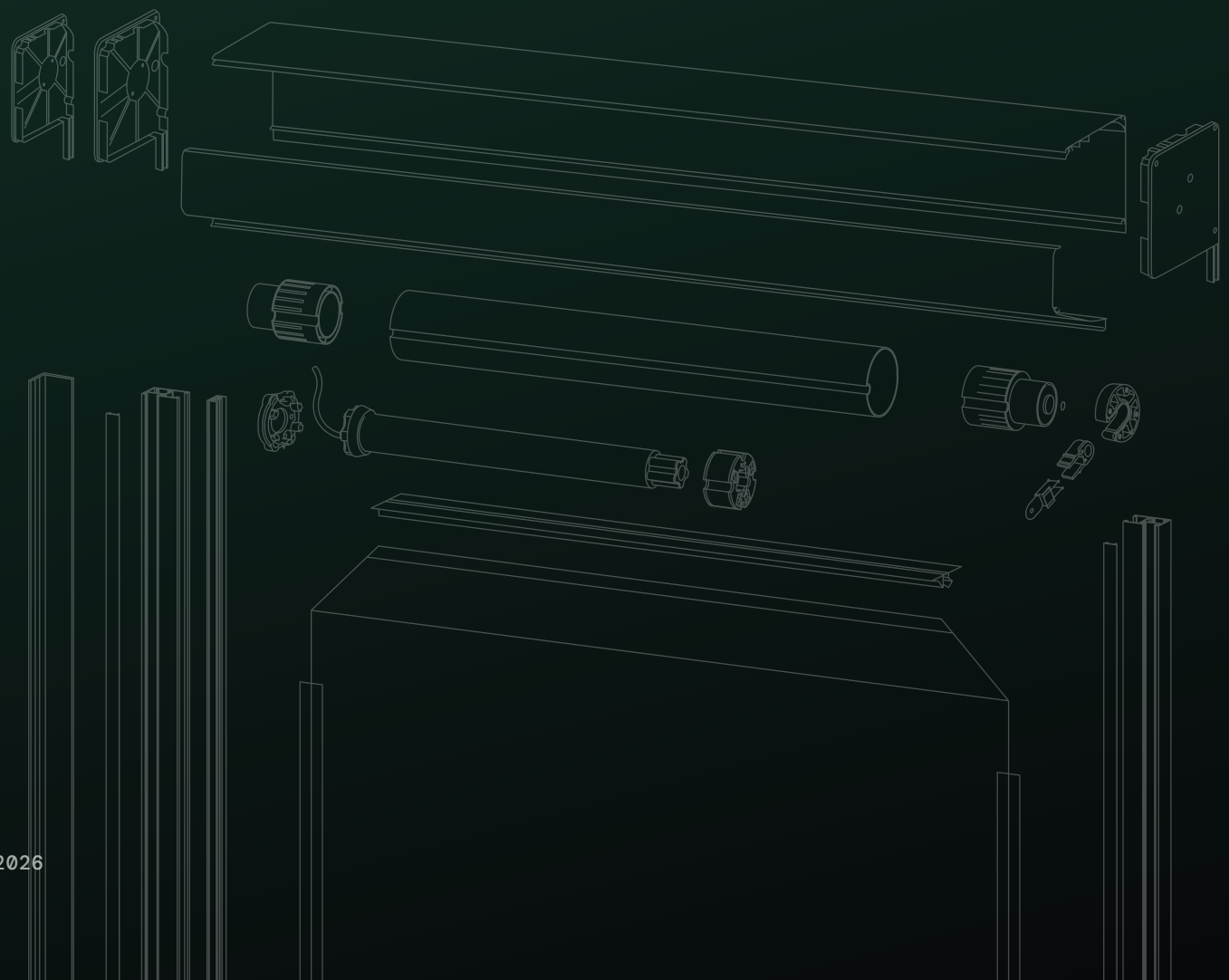

REV. 11/2026

Contents

	Before you start	03
STEP 1	Unpack and confirm sizes	04
STEP 2	Dry-fit the tracks and predrill	05
STEP 3	Mount the unit	06
STEP 4	Wiring and power	07
STEP 5	Zip the fabric into the tracks	08
STEP 6	Set the limits	09
STEP 7	Install the screw covers	10
	Final check	11

Parts of your screen

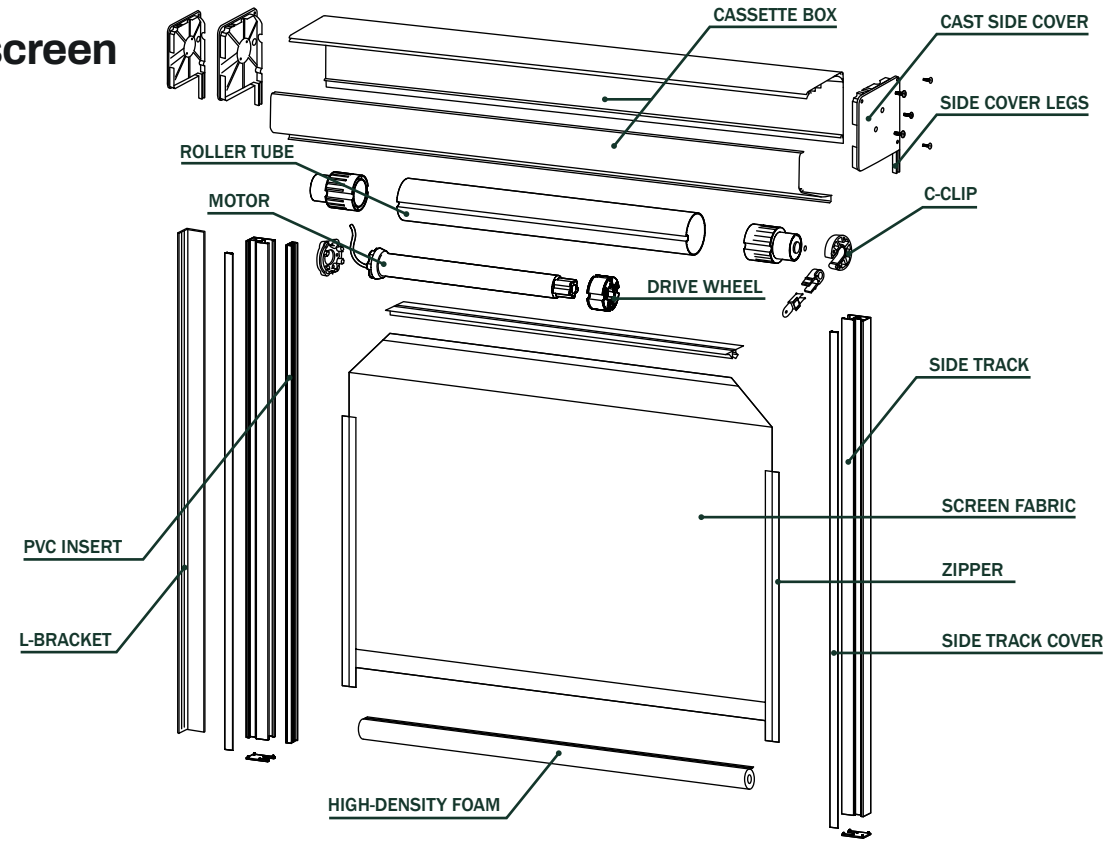

Technical questions: 845-415-4700
Order questions: Shading Direct, 888-647-4233
Monday to Friday, 8 a.m. to 5 p.m. ET

Before you start

These steps take you from a sealed box to an installed screen that runs up and down on its own. Read them through once before you begin.

Bring a helper. You'll need a second pair of hands in Steps 3 and 5.

Be gentle with the end cap legs. The tracks hang on them, and they can snap if the cassette box is set down on a corner.

Keep your hands clean. Handprints on the fabric are very hard to remove.

Opening the box

Your box should arrive undamaged. Carefully cut off the straps and remove the white corner boards. The unit is packed in foam pillows. Don't cut into the box itself, or you could damage the unit inside.

TIP

A magnetic Phillips bit keeps screws from dropping into the track.

What's in the box

- [ ] Cassette box, with the fabric, weighted bar and motor inside
- [ ] 2 side tracks, with black PVC track inserts
- [ ] 2 side track covers
- [ ] Power plug
- [ ] Remote control
- [ ] Installation instructions and owner's manual

NOTE

Mounting screws are not included. Choose screws suited to your mounting surface and strong enough to hold the full weight of the unit.

Tools you'll need

- TAPE MEASURE
- PENCIL
- 6 FT LEVEL
- CORDLESS DRILL
- CORDLESS IMPACT DRIVER
- IMPACT DRIVER BIT SET
- METAL AND WOOD DRILL BITS
- MOUNTING SCREWS (NOT INCLUDED)
- RUBBER MALLET

OPTIONAL

- CHOP SAW OR HACKSAW WITH NON-FERROUS METAL BLADE

Only if you ordered long tracks to cut on site.

Hammer drill and masonry bits needed if mounting into concrete or masonry.

STEP 01

Unpack and confirm sizes

Everything we build is made to order. Before anything is fastened, make sure what arrived matches what you ordered and fits your opening.

Confirm the unit size.

Measure the cassette box and the side tracks.

- **Total unit width** is the outside-to-outside length of the cassette box.
- **Total unit drop** is the height of the cassette box plus the length of the side tracks, installed on the side cover legs.

If your tracks were ordered long to be cut on site, the assembled total unit drop will not be correct.

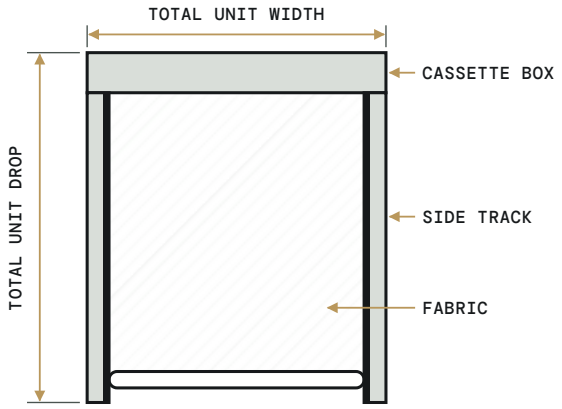

Confirm the opening.

Re-measure the opening at the top, middle and bottom. The unit is built 1/8 in. narrower than the width you ordered, which allows for small variations in the opening. Once it checks out, mark where the unit will mount, and make sure there is something structural behind the sheet rock like a wall stud.

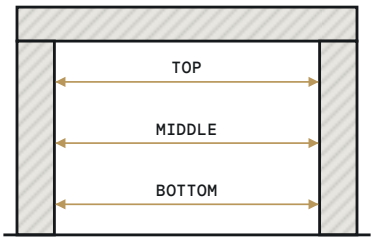

IMPORTANT

Leave at least 18 in. of clear space behind the screen fabric, with no walls, windows or other obstructions. 18 to 24 in. is best. The fabric needs room to react when the ball hits it. With less space, expect damage to the fabric and to whatever is behind it.

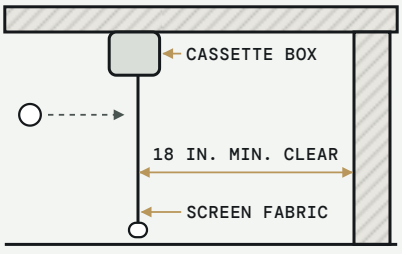

Ready to go?

- ☐ All the components are present
- ☐ I have the required tools (see the complete list on page 3)
- ☐ I have an assistant or two
- ☐ I have the proper length screws needed*

*Mounting screws are not included.

STEP 02

Dry-fit the tracks and predrill

This is your last chance to check the finished width before anything is fastened, so take your time.

01 Lay the cassette box on a clean, flat surface, facing up. Slide the side tracks onto the legs of the end caps. The unit is now at its finished size. Hold it up to your opening and make sure it fits. Be sure to support the weight of the cassette box when lifting. If mishandled, the side cover legs can break.

02 Once you're happy with the fit, slide the tracks back off the legs.

03 Pull out the black track inserts. These are the hard PVC strips with rubber wings that run the length of each track. The V notch at the top of each insert is there on purpose. It helps you feed the fabric's side zippers in during Step 5.

04 Lay each track on the ground with its open side facing up. Predrill 4 holes: one 6 in. from the top of the track, one 6 in. from the bottom, and two evenly spaced between them.

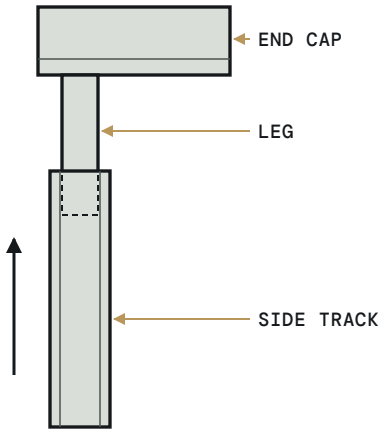

About the predrilling

Standard method. Drill straight through both walls of aluminum with one bit, sized for the screw's shank. The screw passes through both walls and fastens into the side of the opening.

Running the power cord up through a track? Only then, drill two sizes of hole. First drill through both walls with a bit sized for the screw's shank. Then widen the hole in the first wall with a bit large enough for the screw head to pass through. The screw then fastens through the second (outer) wall into the side of the opening.

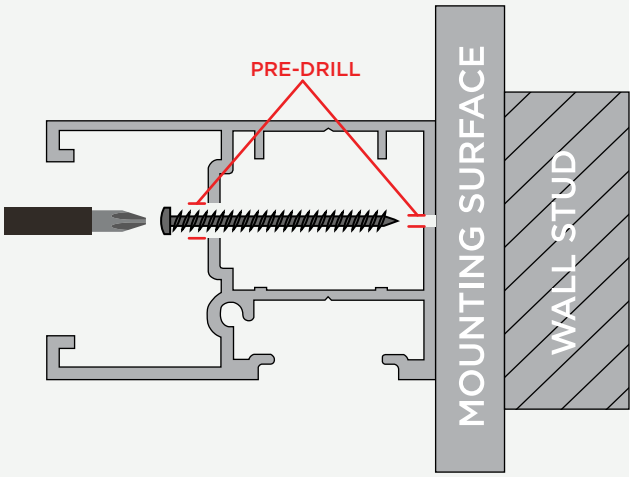

STEP 03

Mount the unit

Your tracks are predrilled, so you're ready to stand the unit up. Have your helper standing by.

01 Slide the tracks back onto the end cap legs, with the track openings facing each other.

> NOTE Using a vertical level, mark the mounting surface where the track should be installed to ensure proper placement.

02 Stand the unit up in the opening. Support the cassette box by its corners so the end cap legs don't snap. Level the cassette box.

03 Drive one screw through the top hole of one track, 6 in. from the top of the track, into the side of the opening. Check the vertical level of the track, then add a screw in the lowest hole. Repeat this process for the second track.

04 The unit should now hold its own weight, but keep someone steadying it until the rest of the screws are in.

05 With the front of the cassette box (the opening side) facing outward, check that the power cord is on the side you ordered.

06 Measure the cassette box end to end across the top. Then measure across the bottom of the tracks. The two numbers should match.

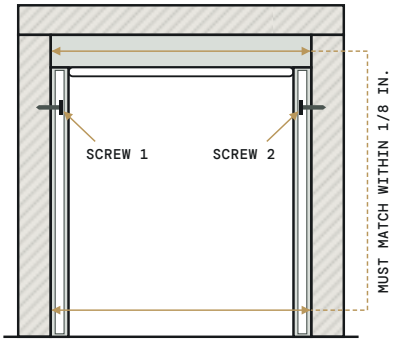

If the opening width between the top of the tracks and the bottom of the tracks is within 1/8 in., the remaining screws can be added to the tracks.

If they don't: stop here and use one of these:

1. **L-channel brackets** (if you ordered them). Mount the brackets to the sides of the opening, then level the tracks and fasten them to the brackets.
2. **Shims.** Shim between the track and the side of the opening (washers work well), or cut back the sheet rock behind the side track.

Either way, the bottom measurement must end up within 1/8 in. of the top. More than 1/8 in. of difference can keep the screen from running properly.

07 Reinstall the black track inserts. Work from the top down, twisting each one in with its flat side against the back of the track. The V notch goes at the top, by the cassette box.

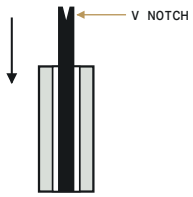

STEP 04

Wiring and power

> CAUTION
> Turn off the power at the breaker before wiring. If you hard-wire the unit into a junction box, have a licensed electrician do it to local code.

Your screen has a UL-listed, 120 V, 2.0 A, three-wire motor. The power cord holds three wires. You can wire it to the plug provided, or hard-wire it into a junction box.

Wiring the plug

01 Plan the route of the power cord. Leave a few extra inches, then cut the cord to length. Do not cut the cord less than 12 in. to avoid cutting the antenna for the motor receiver.

02 Cut away 2 in. of the white outer jacket to expose the three wires. Be careful not to cut into the wires.

03 Strip about 1/2 in. of insulation from the end of each wire.

04 Take the plug apart by removing the 3 screws around its face. Slide the plug's sleeve onto the cord.

05 Connect the wires: green to the green screw, black to the gold screw and white to the silver screw.

06 Slide the sleeve back up to the plug, seat it, and tighten the 3 screws.

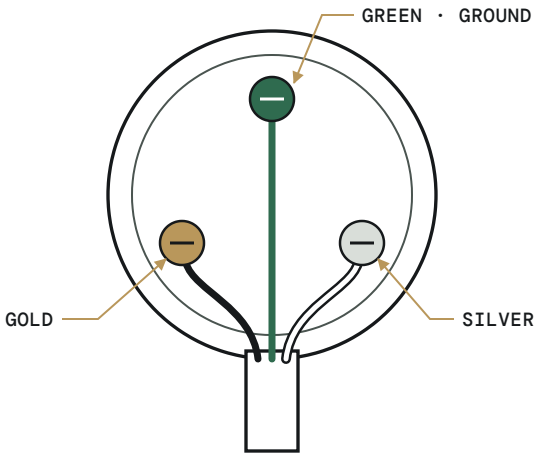

WIRE	CONNECTS TO
Green	Green screw (ground)
Black	Gold screw
White	Silver screw

Plug in the unit, but don't run the fabric all the way down yet. Step 5 starts with the fabric just 4 in. out.

10 ft power cord standard, 24 ft optional.

STEP 05

Zip the fabric into the tracks

The power is on, so from here you'll use the remote. Grab your helper again.

01 a.) Press and hold UP and DOWN together until the motor jogs.

b.) Press and hold DOWN. If the fabric moves up instead, press and hold MY until the motor jogs to reverse the direction.

c.) Hold DOWN to lower the fabric about 4 in., then release.

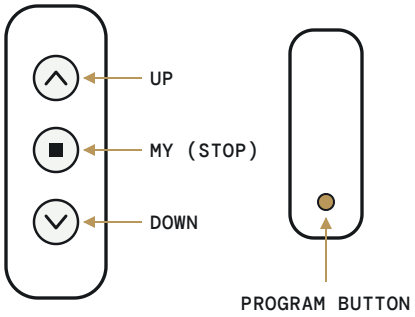

02 Wash your hands. This is where you start touching the fabric, and handprints are hard to remove.

03 With your helper, lift the weighted bar and feed a side zipper into each black track insert. The V notch at the top of each insert guides the zipper in.

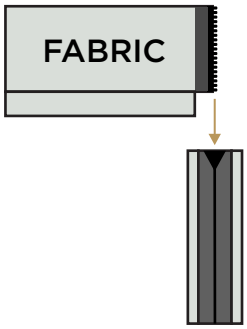

04 With both zippers started, run the fabric down about 3 ft and press MY to stop.

05 Press your hand flat against the fabric along each edge to confirm the zipper is captured by the insert on both sides. If a zipper has slipped out, raise the fabric and feed it in again.

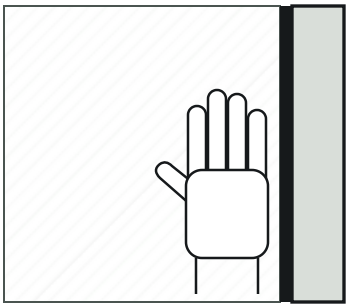

Next, set the limits. Your screen ships without its limits set, so go straight to Step 6.

STEP 06

Set the limits

Your screen ships without its top and bottom stopping points (its limits) set. Set them now, before you run the screen all the way up or down. The notes at the bottom of the page cover changing a limit later, adding a remote and resetting the motor.

Set the limits.

NOTE After every command, the motor jogs (a short up-and-down movement) to confirm.

01 Start.



The motor is still in setting mode from Step 5.

02 Set the upper limit.



Bring the fabric to where you want it to stop at the top, fine-tuning with UP or DOWN. Press and hold MY and DOWN together until the fabric starts moving down, then release.

03 Find the lower limit.



Press MY to stop it where you want the lower limit, with the foam resting on the floor, fine-tuning with UP or DOWN.

04 Set the lower limit.



Press and hold MY and UP together until the fabric starts moving up, then release. It stops at the upper limit.

05 Confirm.



Press and hold MY until the motor jogs. The limits are saved.

06 Save to the remote.



Press and hold the program button on the back of the remote until the motor jogs. The screen now runs with a single press. Check both limits.

Change one limit.

Run the fabric to the limit you want to change and let it stop. Press and hold UP and DOWN together until the motor jogs, then release. Move the fabric to the new position. Press and hold MY until the motor jogs, then release. Check the new limit.

Add a remote.

Press and hold the program button on the back of a remote that already works until the motor jogs.

Then briefly press the program button on the new remote until the motor jogs.Test it.

Reset the motor.

Disconnect power for 2 seconds, reconnect for 10 seconds, disconnect for 2 seconds, then reconnect. The motor should move briefly and stop on its own. If it doesn't, repeat. Once it stops, press and hold the program button on the back of the remote for 10 seconds, until the motor jogs twice.

Then reset the limits.

Technical questions: 845-415-4700
Order questions: Shading Direct, 888-647-4233
Monday to Friday, 8 a.m. to 5 p.m. ET

STEP 07

Install the screw covers

Once the screen runs smoothly and the limits are set, finish each track with its aluminum screw cover. The covers snap onto the face of the track.

01 **Important:** Start at both ends. First, with a rubber mallet or the side of your fist, tap the cover into the grooves of the track until about 3 in. is seated at the top and 3 in. at the bottom.

02 Then work your way down the middle until the cover is seated along its full length.

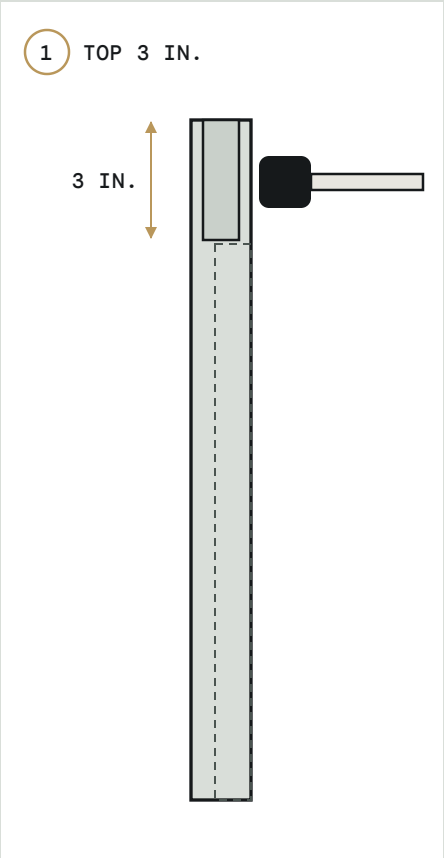

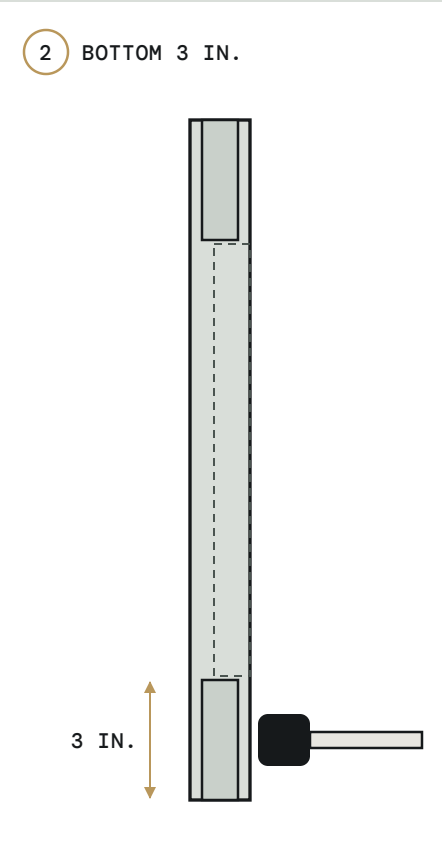

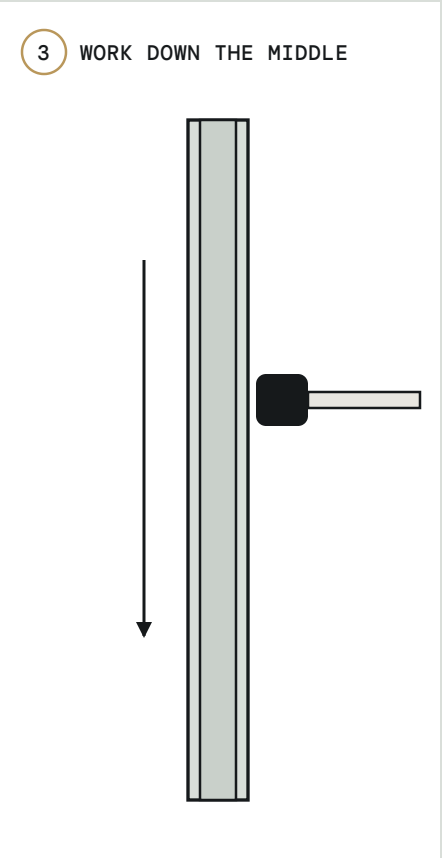

TIP

Make sure the bottom of the cover sits all the way down. If it doesn't, the cover will run long at the top and is hard to adjust without damaging it.

Final check

Run down this list before you call the job done.

- [ ] Unit width matches the opening
- [ ] Both tracks plumb, with top and bottom width measurements within 1/8 in.
- [ ] All predrilled holes fastened to the sides of the opening
- [ ] Black PVC track inserts back in, V notch at the top
- [ ] Aluminum screw covers seated along their full length
- [ ] Power cord on the correct side
- [ ] Both zippers captured by the track inserts
- [ ] Up and down limits set

Technical questions: 845-415-4700
Order questions: Shading Direct, 888-647-4233
Monday to Friday, 8 a.m. to 5 p.m. ET

SCREENSHOTGOLF.COM · SHADINGDIRECT.COM

SCREENSHOT GOLF

Retractable golf impact screens, custom-built to your opening.

TECHNICAL 845-415-4700

ORDERS 888-647-4233 · Shading Direct

Monday to Friday, 8 a.m. to 5 p.m. ET

WEB screenshotgolf.com · shadingdirect.com

Assembled in the USA by Eclipse Outdoor.

REV. 11/2026